TECHNICAL DRAWING
WOODIO BLOCK

woodio®

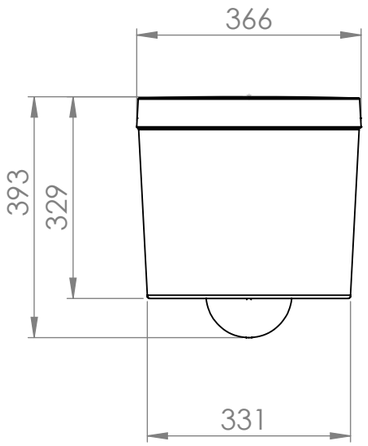

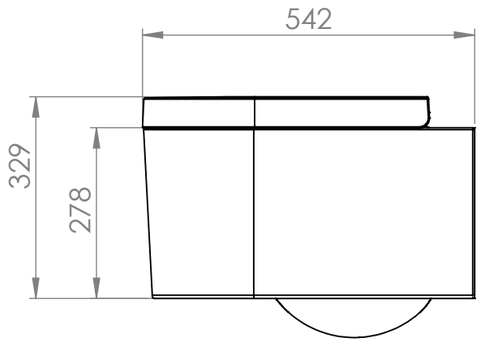

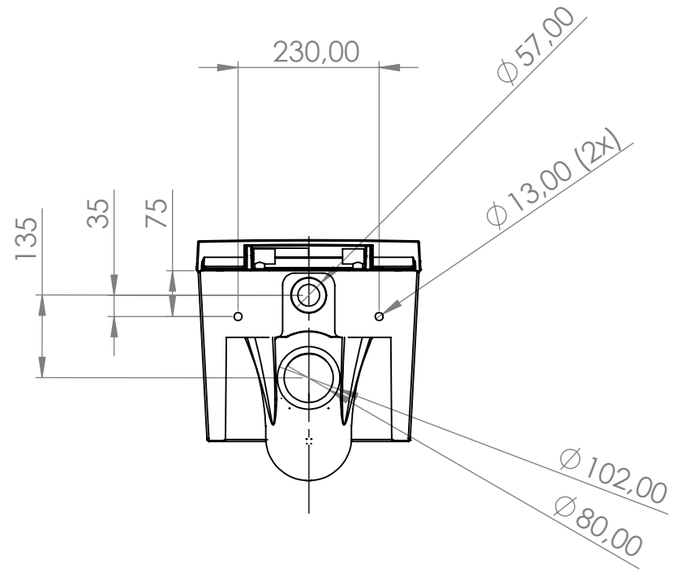

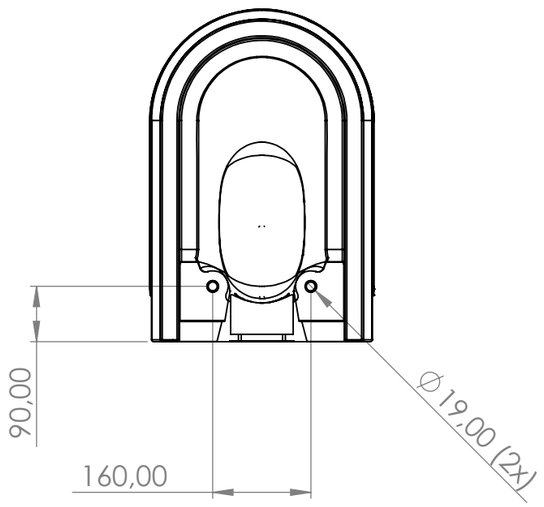

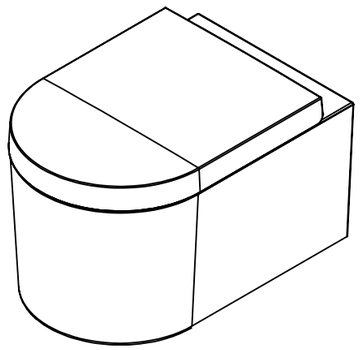

Scale1:10

REC (PF-DRW) Woodio Block v2 [376].pdf